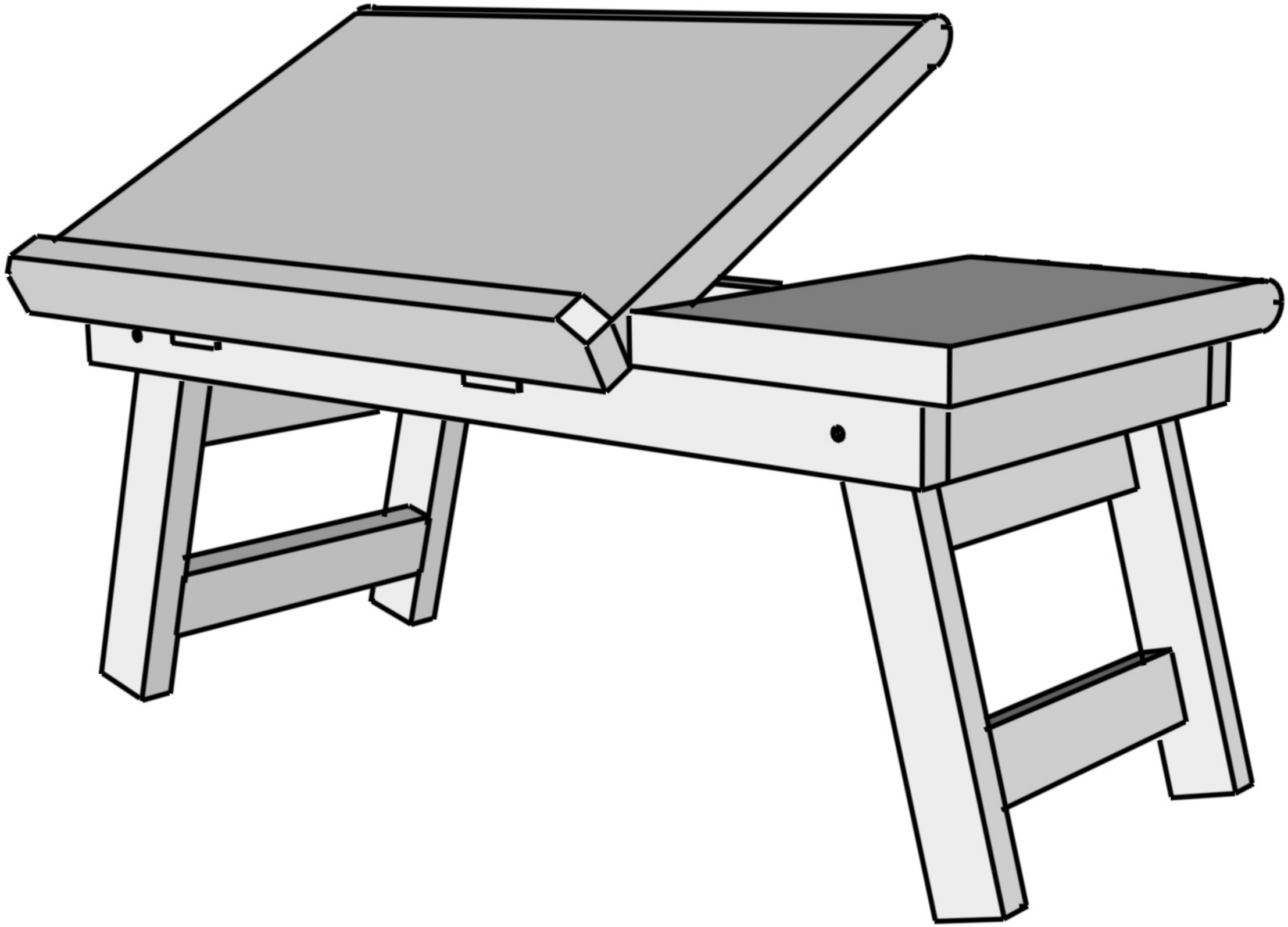

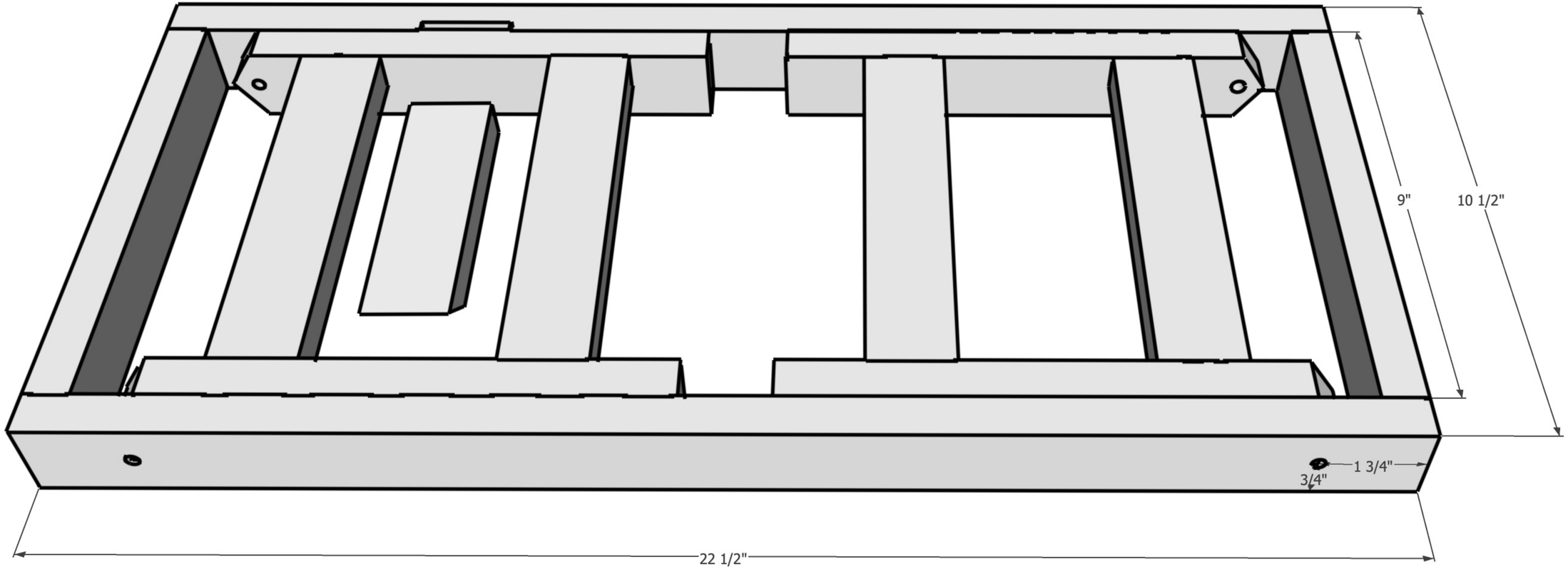
9"
10 1/2"
1 3/4"
3/4"
22 1/2"

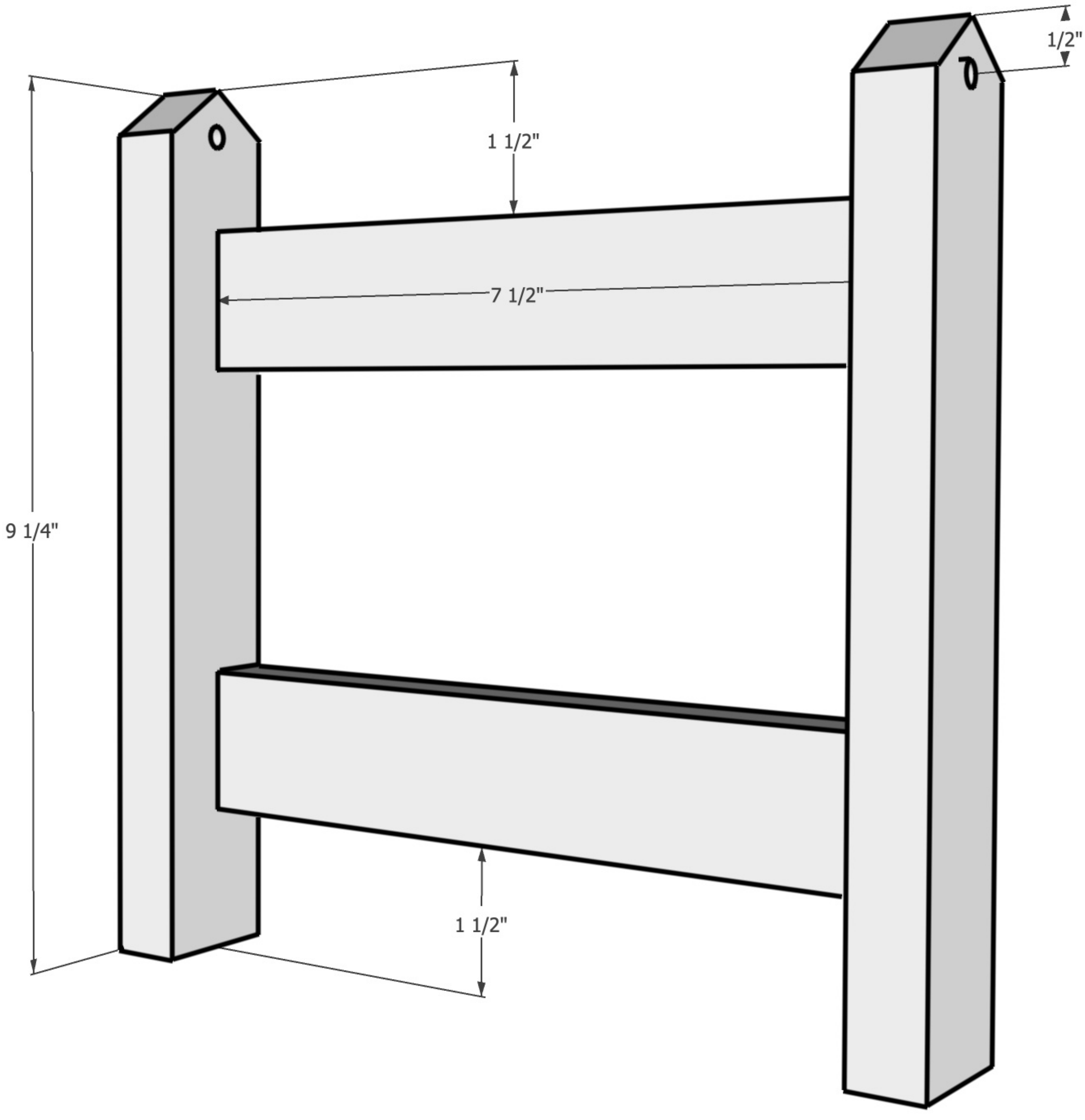
1/2"
1 1/2"
7 1/2"
9 1/4"
1 1/2"